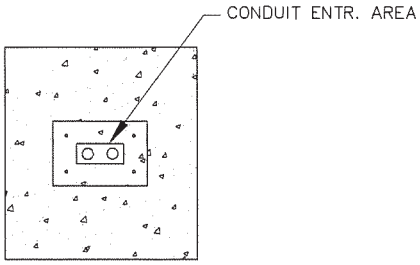

PLAN VIEW

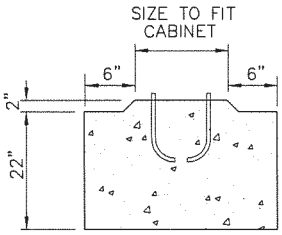

FRONT VIEW

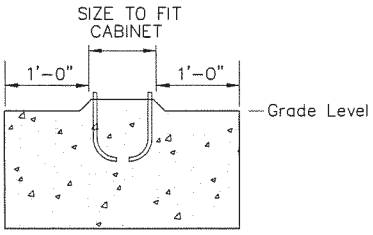

SIDE VIEW

STREET LIGHT CONTACTOR FOUNDATION

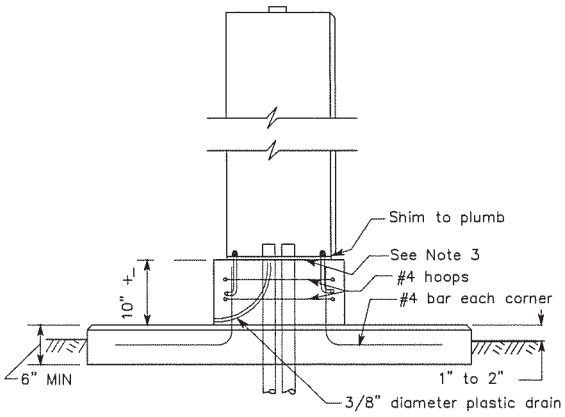

SIDE VIEW

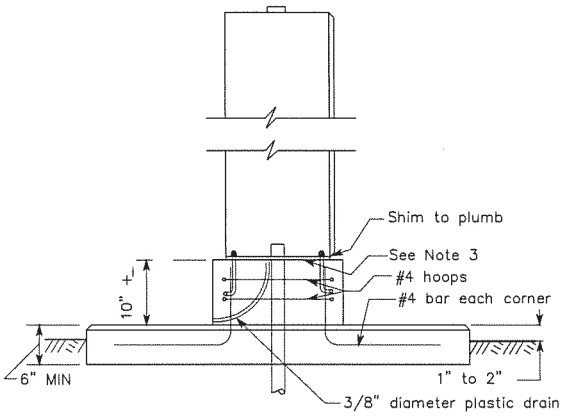

SIDE VIEW

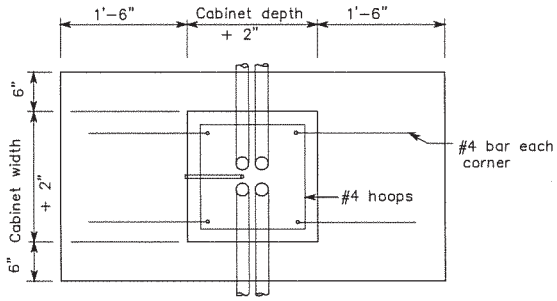

PLAN VIEW

PAD MOUNT
CONTROLLER CABINET FOUNDATION

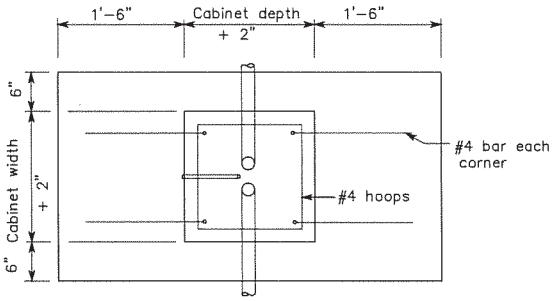

PLAN VIEW

PAD MOUNT
BATTERY BACKUP SYSTEM (BBS) FOUNDATION

For NOTES see Std. Plan 126.2

CITY OF RENTON PUBLIC WORKS DEPARTMENT	CABINET FOUNDATION DETAILS	STD. PLAN – 126.1 APPROVED: Gregg Zimman 6/11/12 DATE